Data Sheet

Itemnumber....: 3142500100

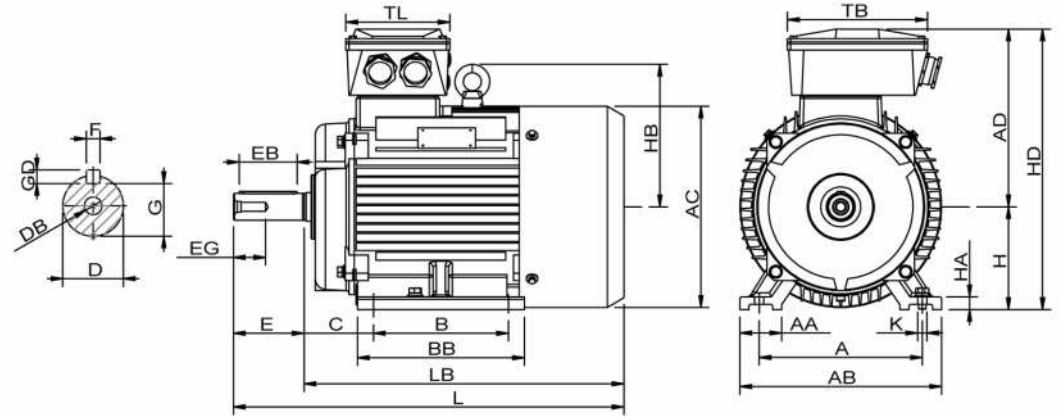

A = 406	**AC = 484**	**BB = 445**	**DB = M20**	**EG = 56**	**GD = 11**	**HB = 317**	**L = 910**	**TL = 230**
AA = 80	**AD = 374**	**C = 168**	**E = 140**	**F = 18**	**H = 250**	**HD = 624**	**LB = 770**	
AB = 484	**B = 349**	**D = 65**	**EB = 110**	**G = 58**	**HA = 30**	**K = 24**	**TB = 305**	

Version
Type.....: HMC2 250M-4
Design.....: Induction motor
Standard series.....: IEC 60034
Phase / Voltage range.....: 3~ / Low

Electrical design
Efficiency.....: IE2
Pole.....: 4
Power at 50 Hz (kW).....: 55,0
Hz.....: 50
Voltage.....: 400VD/690VY
Winding voltage.....: 400VD/690VY 50 Hz
Power output (kW).....: 55,0
Duty.....: S1
Insulation class.....: F
Temperature rise.....: B

Motor protection
Thermal protection main....: PTC 3x 155 dgr
Thermal protection second..: None
Space heater.....: None
Temperature detector.....: No
SPM.....: No
IR wire.....: No
Tropical insulation.....: No

Explosion protection
According to.....: None

General
Direction of rotation.....: CW
Painting.....: RAL 9005
Nameplate.....: Multivoltage + VFD
Special packing.....: No
Special requirements.....: No

Mechanical design
Frame size.....: 250
Mounting.....: B3
Rain cap.....: No
Protection class.....: IP55
Cooling method.....: IC411/TEFC
External grounding.....: Yes
Drain hole.....: Yes
Frame material.....: Cast Iron
Material approval.....: None
Shaft.....: IEC Standard
Key.....: Closed key
Balancing.....: Half key balancing
Vibration class.....: Grade-A
Weight (kg).....: 390

Environment condition
Ambient temp. min. (°C)..: -20
Ambient temp. max. (°C)..: 40
Altitude (mtr up to).....: 1000

Bearing
DE Bearing.....: 6314/C3
NDE Bearing.....: 6313/C3
Fixed bearing.....: DE

Terminal box
Tbox position.....: Top
Cable entry direction.....: Right (from DE)
Cable entry
Main.....: 2 x M63x1,5
Ø37-44mm metal
Accessory.....: 2 x M20x1,5
Metal blindcaps
Connection type.....: Delta (D)
Terminal board thread.....: 6-M10

Test values
Rotor inertia (kgm²).....: 0,75
Noise level (dB(A)).....: 67
No load current (A).....: 31,0
Winding resist. (ohm).....: 0,12
Starting time (sec.).....: 0,15
Temp. rise winding (K).....: 65
Temp. rise surface (K).....: 50

Rated power (kW) .....:	55,0	53,5	66,0	64,0
Frequency (Hz) .....:	50	50	60	60
Voltage (V) .....:	400 690	380 660	480 830	440
Connection .....:	D Y	D Y	D Y	D
Full load current (A) ...:	96,0 56,0	98,5 57,5	96,0 56,0	100,0
Speed (rpm) .....:	1490	1490	1780	1780
Power factor cos(phi) ...:	0,89	0,89	0,89	0,90
Efficiency, 100/75/50 (%) :	93,8/94,1/93,5	93,8/94,1/93,5	93,8/94,1/93,5	93,3/93,7/93,0
Ist/In .....:	7,15	6,30	7,15	6,60
Full load torque (Nm) ...:	355	345	355	345
Tst/Tn .....:	2,28	2,12	2,28	1,98
Tmax/Tn .....:	3,20	2,95	3,20	2,75
Duty .....:	S1	S1	S1	S1
Ambient temp. (°C) .....:	40	45	40	45

Data are not binding. Hoyer reserves the right to implement changes without notice. The extent of data are not equivalent to nameplate on the motors.